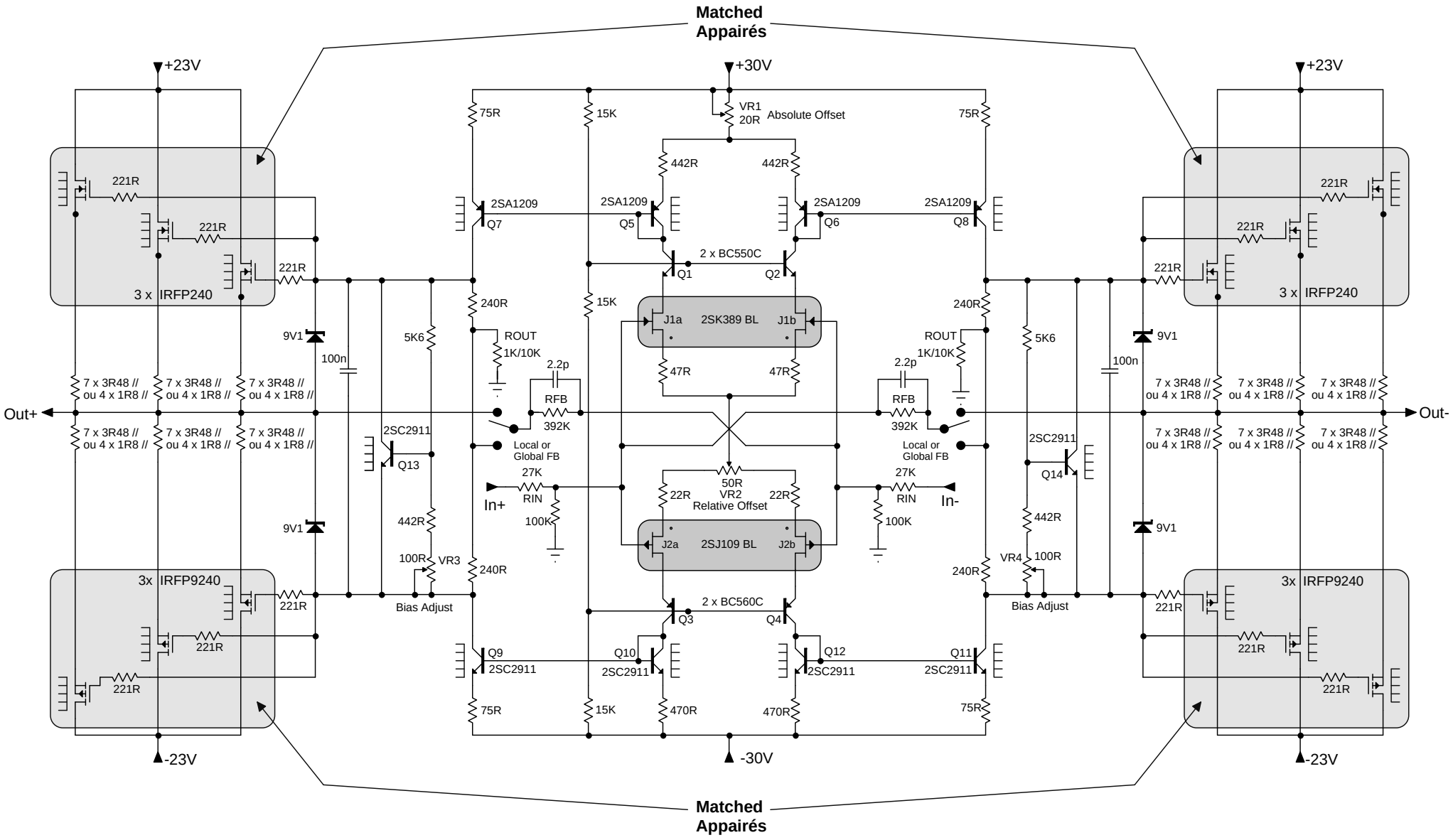
Matched
Appairés
+23V
+30V
+23V
VR1
20R
Absolute Offset
75R
15K
75R
442R
442R
2SA1209
Q7
2SA1209
Q5
2SA1209
Q6
2SA1209
Q8
2 x BC550C
Q1
Q2
221R
221R
221R
3 x IRFP240
240R
15K
240R
J1a
2SK389 BL
J1b
47R
47R
9V1
100n
5K6
ROUT
1K/10K
2.2p
RFB
392K
Local or
Global FB
7 x 3R48 //
ou 4 x 1R8 //
Out+
Out-
2SC2911
Q13
27K
RIN
In+
In-
100K
50R
VR2
Relative Offset
22R
22R
J2a
2SJ109 BL
J2b
442R
100R
VR3
Bias Adjust
VR4
3x IRFP9240
2 x BC560C
Q3
Q4
Q9
2SC2911
Q10
2SC2911
Q12
2SC2911
Q11
2SC2911
470R
470R
-23V
-30V
-23V
Matched
Appairés

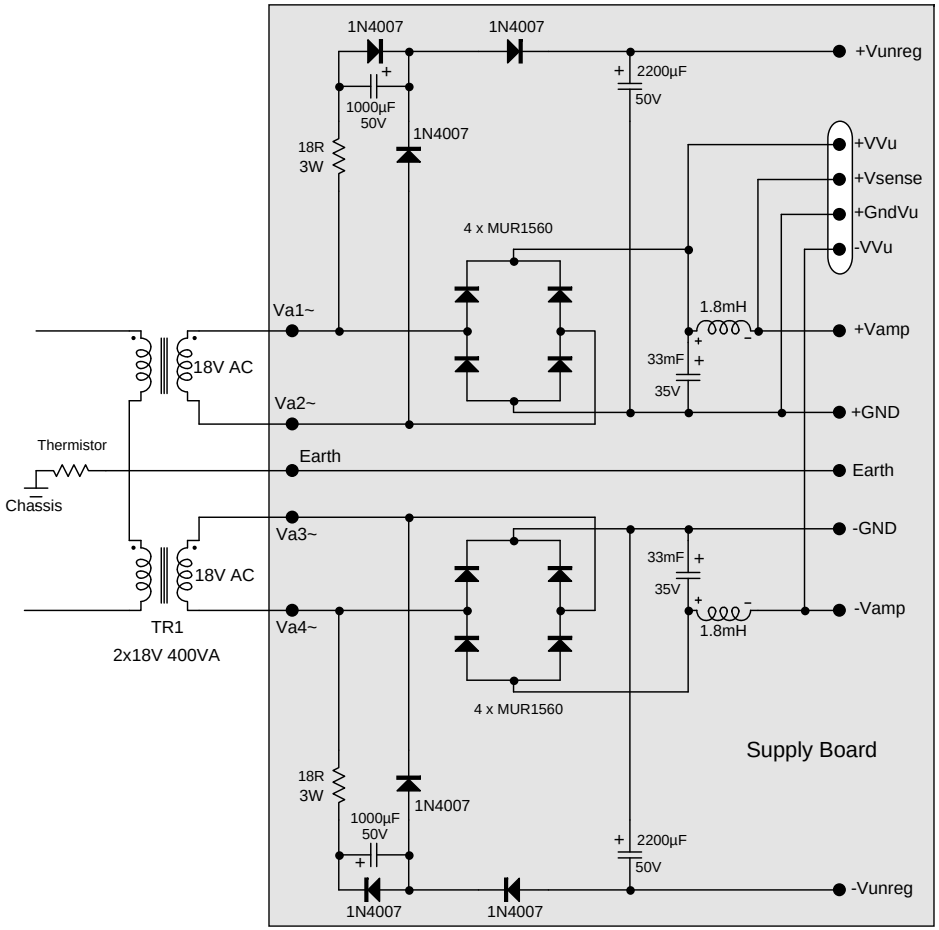
1N4007
1N4007
+Vunreg
2200µF
50V
1000µF
50V
1N4007
18R
3W
+VVu
+Vsense
+GndVu
-VVu
4 x MUR1560
Va1~
1.8mH
+Vamp
33mF
35V
18V AC
Va2~
+GND
Thermistor
Earth
Earth
Chassis
Va3~
-GND
33mF
35V
18V AC
-Vamp
TR1
Va4~
1.8mH
2x18V 400VA
4 x MUR1560
Supply Board
18R
3W
1N4007
1000µF
50V
2200µF
50V
1N4007
1N4007
-Vunreg

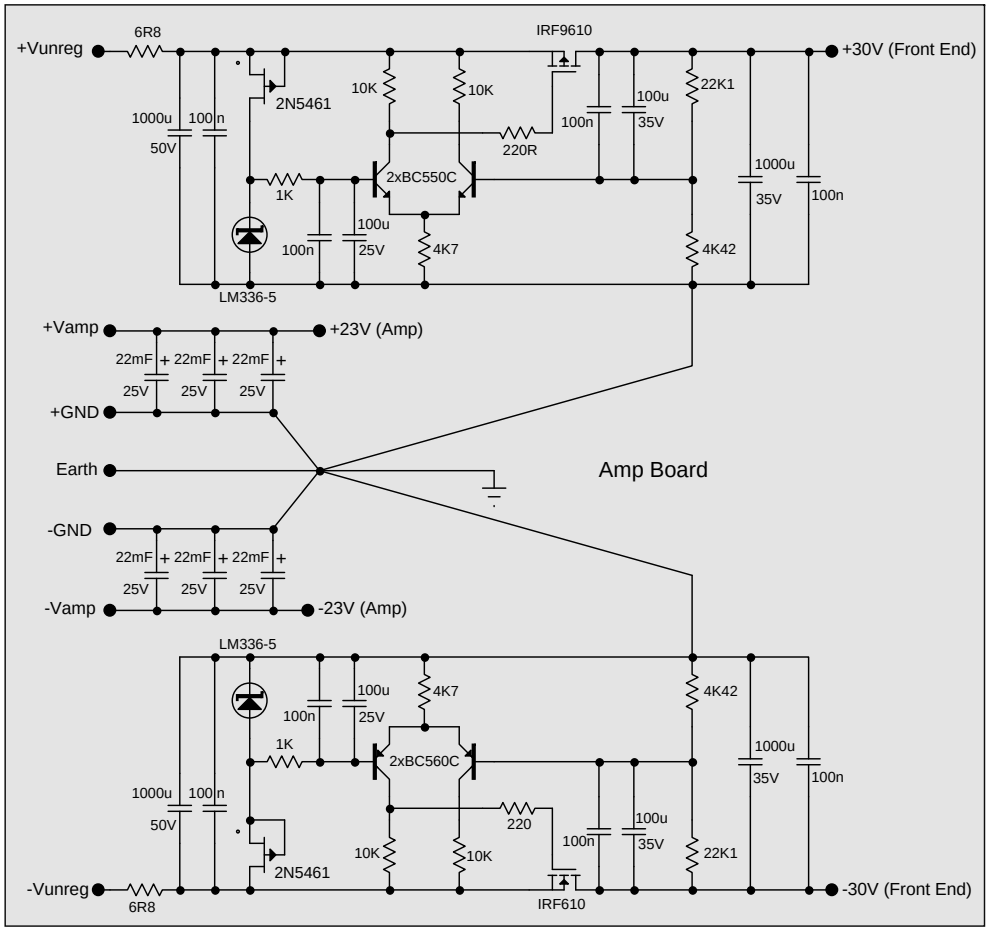
+Vunreg
6R8
IRF9610
+30V (Front End)
2N5461
10K
10K
22K1
1000u
50V
100n
100u
35V
220R
100n
1K
2xBC550C
1000u
35V
100n
100u
25V
100n
4K7
4K42
LM336-5
+Vamp
+23V (Amp)
22mF
25V
22mF
25V
22mF
25V
+GND
Earth
Amp Board
-GND
22mF
25V
22mF
25V
22mF
25V
-Vamp
-23V (Amp)
LM336-5
100u
25V
4K7
4K42
100n
1K
2xBC560C
1000u
35V
100n
1000u
50V
100n
220
100n
100u
35V
2N5461
10K
10K
22K1
-Vunreg
6R8
IRF610
-30V (Front End)

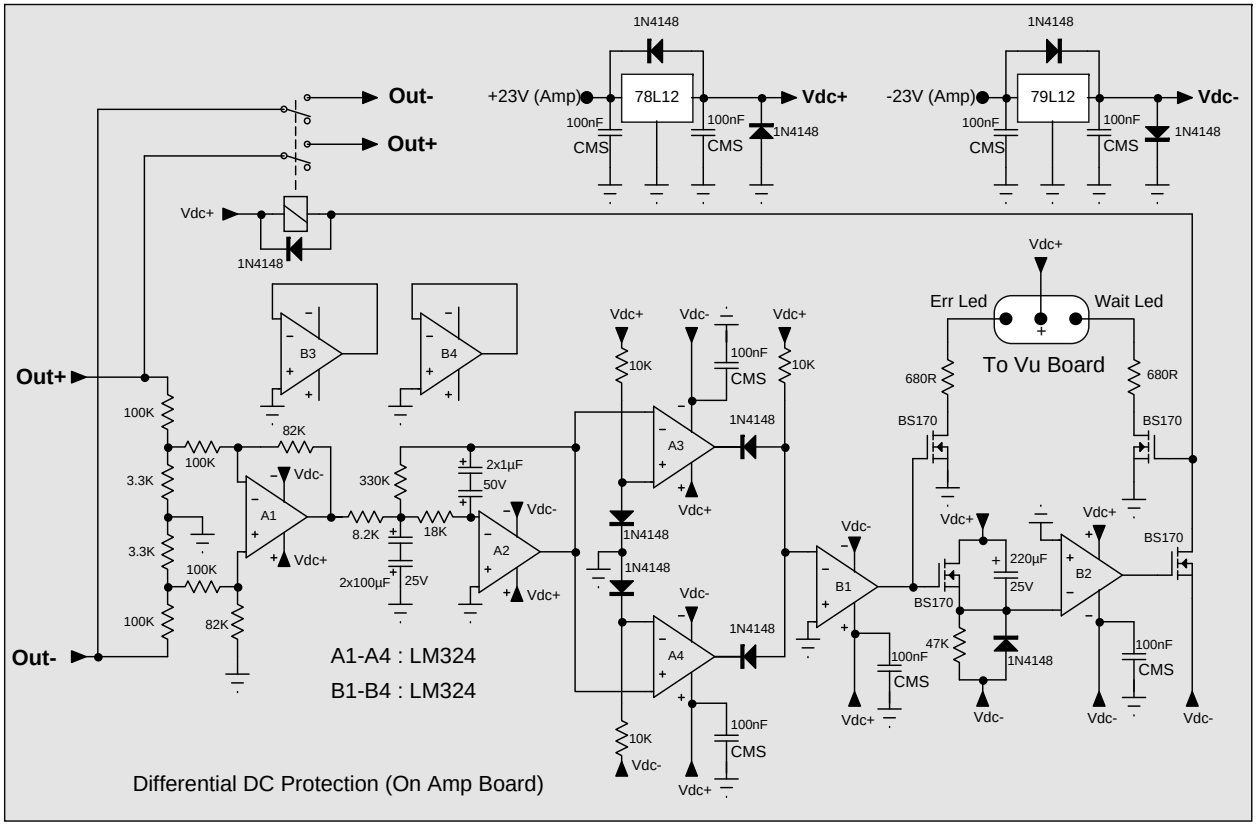
Out-
Out+
+23V (Amp)
78L12
Vdc+
-23V (Amp)
79L12
Vdc-
1N4148
100nF
CMS
Vdc+
Err Led
Wait Led
To Vu Board
680R
BS170
B3
B4
A1
A2
A3
A4
B1
B2
100K
82K
3.3K
330K
8.2K
18K
2x1µF
50V
2x100µF
25V
10K
220µF
47K
A1-A4 : LM324
B1-B4 : LM324
Differential DC Protection (On Amp Board)

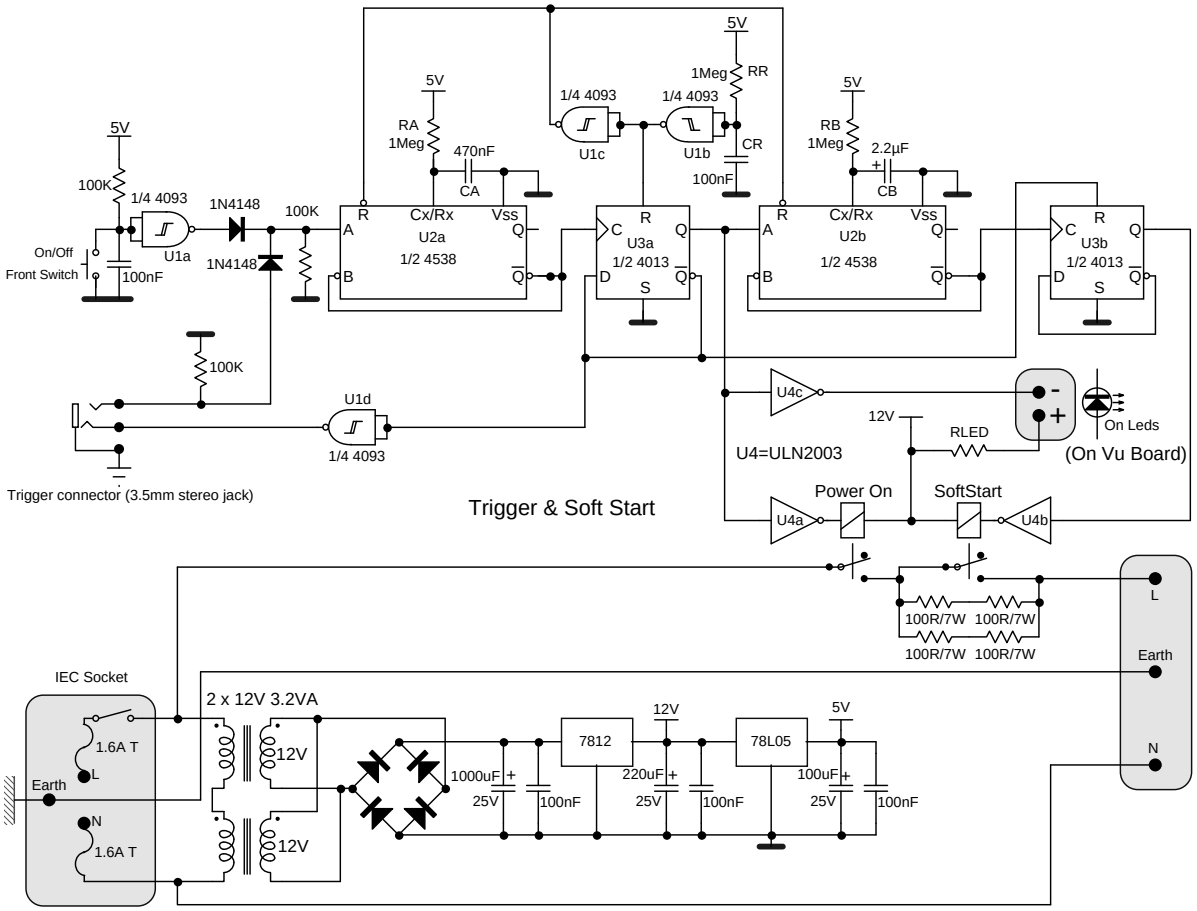
5V
100K
1/4 4093
U1a
On/Off
Front Switch
100nF
1N4148
1N4148
100K
100K
U1d
1/4 4093
Trigger connector (3.5mm stereo jack)
5V
RA
1Meg
470nF
CA
R
Cx/Rx
Vss
A
U2a
1/2 4538
Q
B
Q
1/4 4093
U1c
1/4 4093
U1b
5V
1Meg
RR
CR
100nF
R
C
U3a
1/2 4013
Q
D
S
Q
5V
RB
1Meg
2.2µF
CB
R
Cx/Rx
Vss
A
U2b
1/2 4538
Q
B
Q
R
C
U3b
1/2 4013
Q
D
S
Q
U4c
12V
RLED
U4=ULN2003
On Leds
(On Vu Board)
Trigger & Soft Start
Power On
SoftStart
U4a
U4b
100R/7W
100R/7W
100R/7W
100R/7W
L
Earth
N
IEC Socket
1.6A T
L
Earth
N
1.6A T
2 x 12V 3.2VA
12V
12V
1000uF
25V
100nF
7812
12V
220uF
25V
100nF
78L05
5V
100uF
25V
100nF

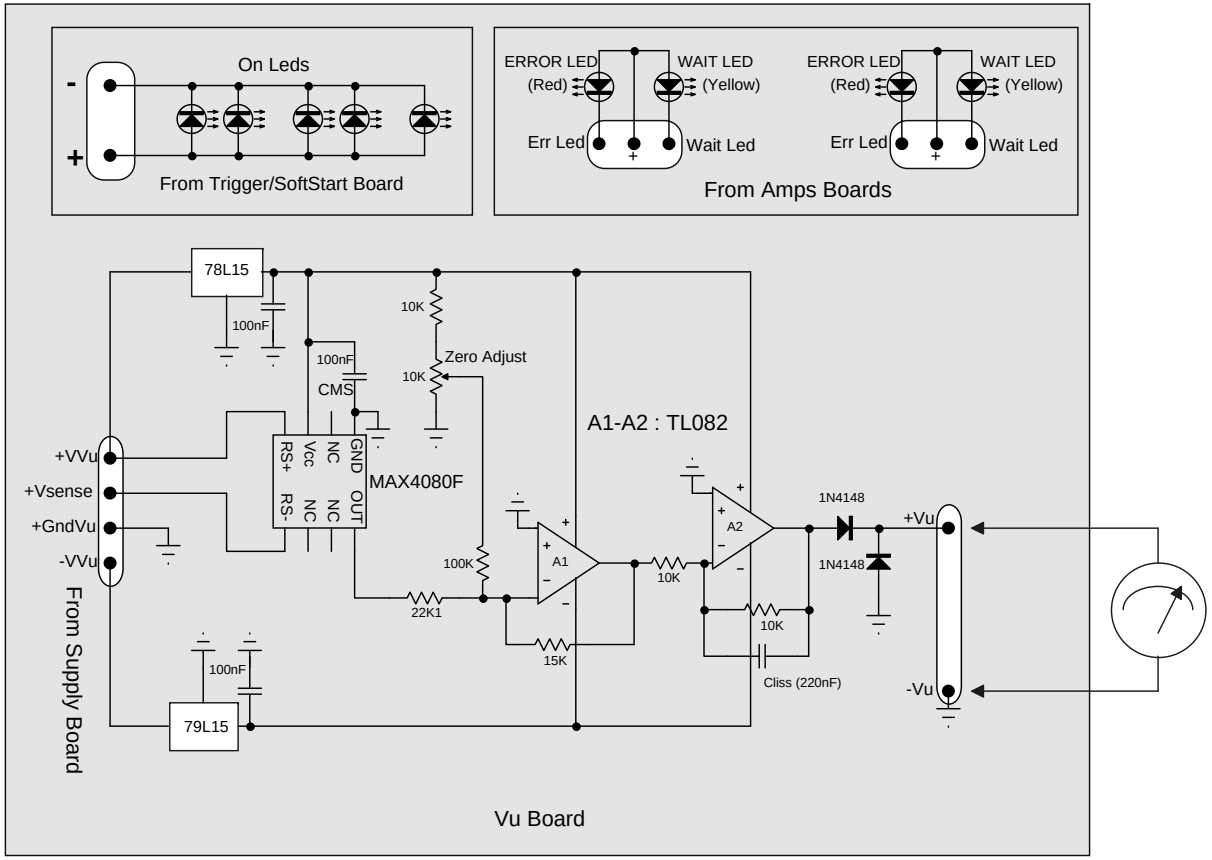
On Leds
-
+
From Trigger/SoftStart Board
ERROR LED
(Red)
WAIT LED
(Yellow)
Err Led
Wait Led
ERROR LED
(Red)
WAIT LED
(Yellow)
Err Led
Wait Led
From Amps Boards
78L15
100nF
10K
Zero Adjust
10K
100nF
CMS
A1-A2 : TL082
+VVu
+Vsense
+GndVu
-VVu
RS+
RS-
Vcc
NC
NC
NC
GND
OUT
MAX4080F
100K
22K1
A1
15K
10K
A2
10K
Cliss (220nF)
1N4148
1N4148
+Vu
-Vu
100nF
79L15
From Supply Board
Vu Board